REV.	DESCRIPTION	ECN NO.	NAME	DATE
1	NEW FRAME	N/A	JING	2020-06-20

ALL PARTS MUST MEET TO RoHS REQUIREMENTS

1.FERRULE T0 CRIMPED
THE HEX. SIZE .256"
2.CONTACT PIN T0 SOLDER

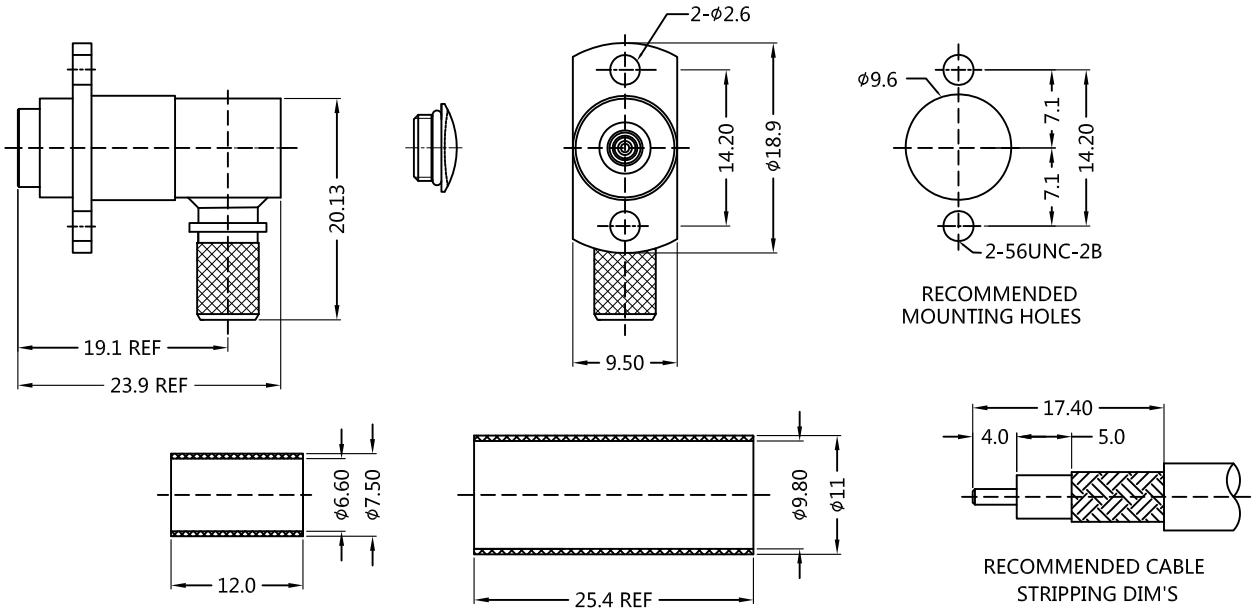

MATERIALS AND PLATING UNIT: MICRO-INCHES		
PART NAME	MATERIALS	PLATING
BODY	BRASS C3604	NICKEL 200 u"/COPPER
INSULATOR	TEFLON MIL-P-19468	N/A
CONTACT PIN	BERYLLIUM COPPER	GOLD 3u" /NICKEL /COPPER
FERRULE	BRASS	NICKEL 200 u"/COPPER

ELECTRICAL CHARACTERISTICS		
IMPEDANCE		50 Ω
VOLTAGE RATING		335 V(rms)
FREQUENCY RANGE		0 ~ 6 GHz
DIELECTRIC WITHSTANDING VOLTAGE		>750 V
CONTACT RESISTANCE	CENTER CONTACT	<3.0 mΩ
	OUTER CONTACT	<2.0 mΩ
INSULATION RESISTANCE		>5000 MΩ
INSERTION LOSS		According as the cable
RF-LEAKAGE		N/A
VSWR		<1.30
3RD INTERMODULATION		N/A

MECHANICAL CHARACTERISTICS	
FORCE TO ENGAGE AND DISENGAGE	N/A
CENTER CONTACT RETENTION FORCE	>6 lbs
RECOMMENDED COUPLING TORQUE	N/A
COUPLING NUT RETENTION FORCE	60 lbs MIN.
DURABILITY	>1000 cycles

ENVIRONMENTAL PARAMETER	
TEMPERATURE RANGE	-55 ℃~+125 ℃

* CUSTOMER OUTLINE DRAWING

UNLESS OTHERWISE SPECIFIED:
1) EDGES : C0.15 MAX ;
2) REMOVE ALL BURRS ;
3) SURFACE ROUGHNESS : Ra1.6 ;
4) UNITS : mm ;
5) DIMENSIONS TOLERANCES
DECIMALS : .x ±0.3 .xx ±0.2 .xxx±0.1;
ANGLES : ± 5°.

THIRD ANGLE PROJECTION

APPROVED :	CUSTOMER P/N : -
CHECKED :	SCALE : 3 : 2
DRAWING : JING	DATE : 2020-06-20
	PAGE : 1/1

SLK SUPERLINK

TITLE : BMA FEMALE R/A FOR LMR240,AMR-600 CABLE

DRAWING NO. : 5BMF11R-A46-001

COMPANY WEBSITE : www.slkcorp.com