REV.	DESCRIPTION	ECN NO.	NAME	DATE
0	FIRST EDITION	N/A	XIAO	2016-05-13
1	A RED BLACK APRONS	N/A	XIAO	2016-05-16
2	UPDATE DRAWING	N/A	PY	2020-05-07

RoHS

ALL PARTS MUST MEET TO RoHS REQUIREMENTS

REMARK:
1.PANEL THICKNESS: 7.0 MAX.

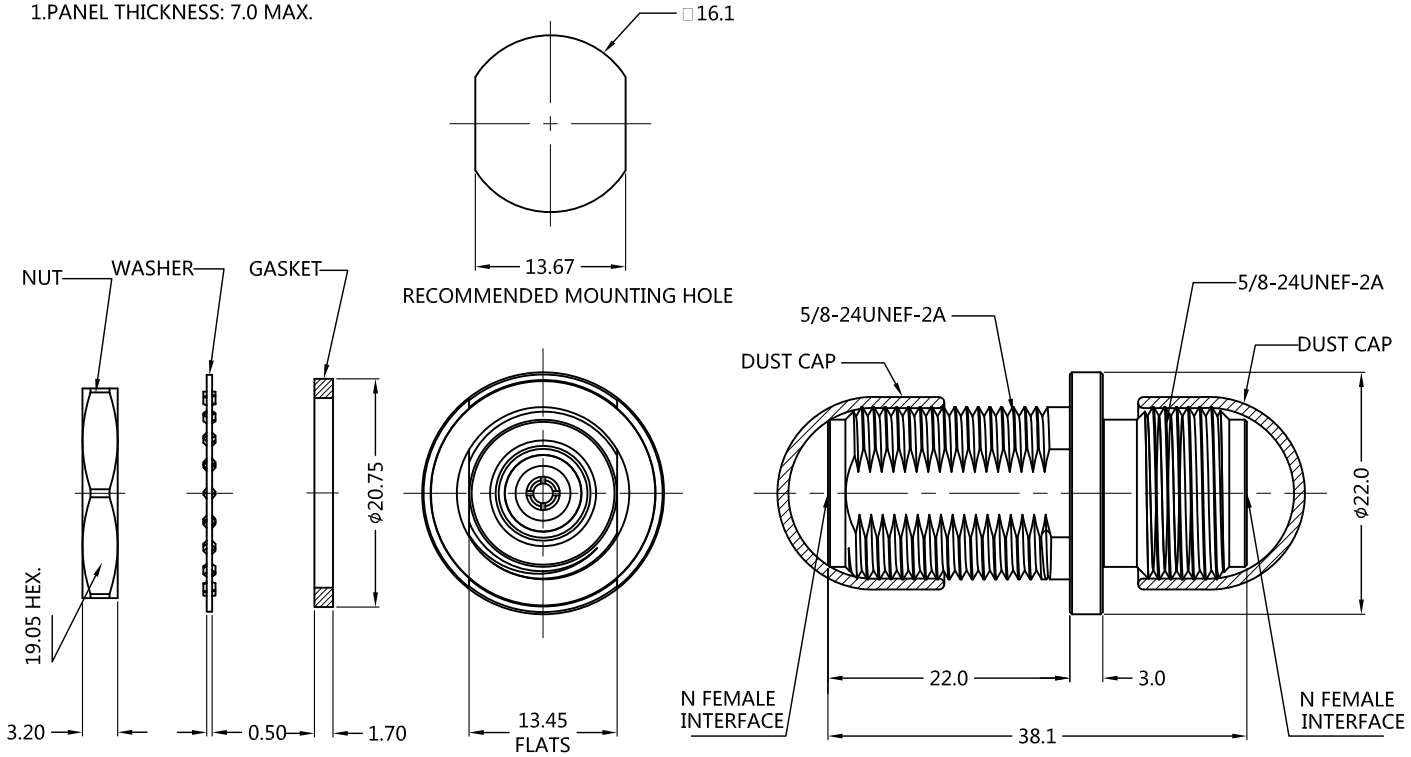

MATERIALS AND PLATING UNIT: MICRO-INCHES

PART NAME	MATERIALS	PLATING
BODY	BRASS C3604	NICKEL /COPPER
INSULATOR	PTFE	N/A
CONTACT PIN	TIN-BRONZE	GOLD 3u"/NICKEL/COPPER
NUT/WASHER	BRASS	NICKEL /COPPER
DUST CAP	PVC	N/A
GASKET	SILICONE	N/A

ELECTRICAL CHARACTERISTICS

IMPEDANCE		50 Ω
VOLTAGE RATING		500 V(rms)
FREQUENCY RANGE		0 ~ 6 GHz
DIELECTRIC WITHSTANDING VOLTAGE		>2500 V
CONTACT RESISTANCE	CENTER CONTACT	<1.0mΩ
	OUTER CONTACT	<0.2mΩ
INSULATION RESISTANCE		>5000 MΩ
INSERTION LOSS		N/A
VSWR		<1.2
3RD INTERMODULATION		N/A

MECHANICAL CHARACTERISTICS

FORCE TO ENGAGE AND DISENGAGE	N/A
CENTER CONTACT RETENTION FORCE	>6lbs
RECOMMENDED COUPLING TORQUE	N/A
COUPLING NUT RETENTION FORCE	N/A
DURABILITY	> 500 cycles

ENVIRONMENTAL PARAMETER

TEMPERATURE RANGE	-55 ℃~+165 ℃

* CUSTOMER OUTLINE DRAWING

UNLESS OTHERWISE SPECIFIED:
1) EDGES : C0.15 MAX ;
2) REMOVE ALL BURRS ;
3) SURFACE ROUGHNESS : Ra1.6 ;
4) UNITS : mm ;
5) DIMENSIONS TOLERANCES
DECIMALS : .x ±0.3 .xx ±0.2 .xxx±0.1;
ANGLES : ± 5°.

THIRD ANGLE PROJECTION

APPROVED :	CUSTOMER P/N : -
CHECKED :	SCALE : 1 : 1
DRAWING : PY	DATE : 2020-05-07
	PAGE : 1/1

SLK SUPERLINK

TITLE : N FEMALE BULKHEAD TO N FEMALE ADAPTER -50 OHM

DRAWING NO. : 5NCF06S-NCF-047

COMPANY WEBSITE : www.slkcorp.com