REV.	DESCRIPTION	ECN NO.	NAME	DATE
0	FIRST EDITION	N/A	HYH	2020-09-03

ALL PARTS MUST MEET TO RoHS REQUIREMENTS

REMARKS:
1. CRIMPED FERRULE HEX. CRIMP SIZE .213"
2. CONTACT PIN TO SOLDER

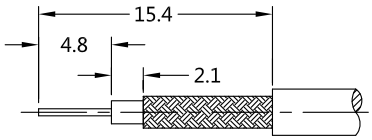

RECOMMENDED CABLE STRIPPING DIM'S

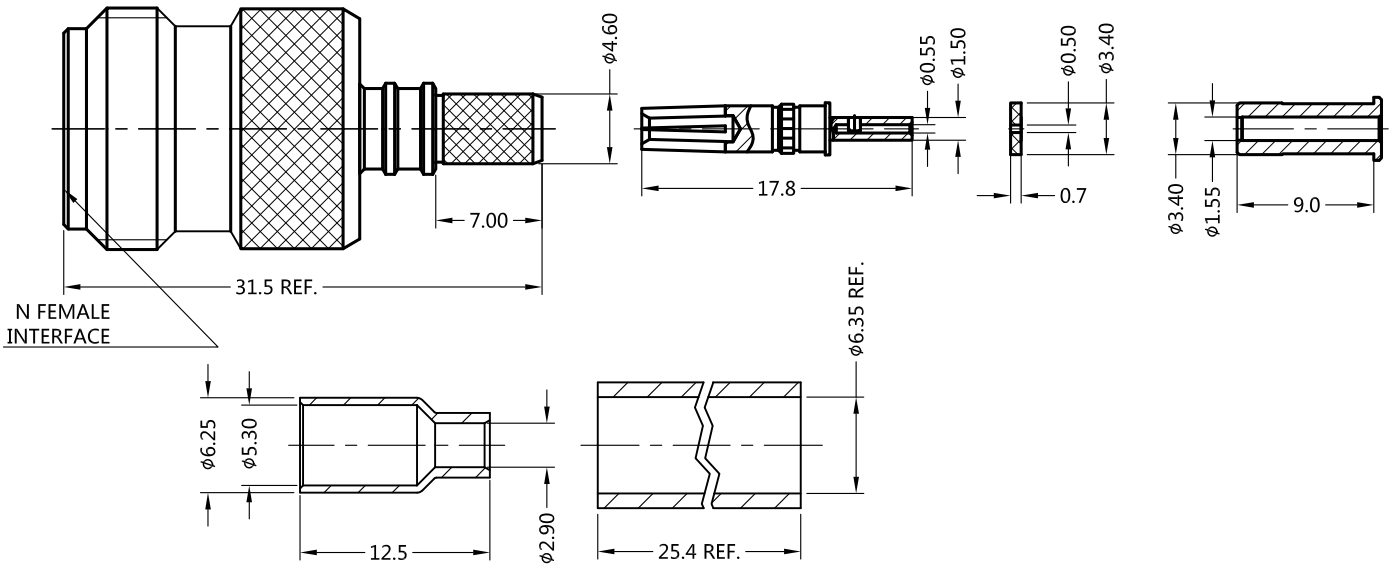

MATERIALS AND PLATING UNIT: MICRO-INCHES

PART NAME	MATERIALS	PLATING
BODY/SHELL	BRASS C3604	NICKEL PL.100u"/COPPER
CONTACT PIN	BE-CU C17300	GOLD PL.15u"/NICKEL/COPPER
INSULATOR	PTFE ASTM-D-1710	N/A
FERRULE	BRASS	NICKEL PL.100u"/COPPER
GASKET	SLICONE	RED

ELECTRICAL CHARACTERISTICS

IMPEDANCE		50 Ω
VOLTAGE RATING		335 V(rms)
FREQUENCY RANGE		0 ~ 12 GHz
DIELECTRIC WITHSTANDING VOLTAGE		>1000 V
CONTACT RESISTANCE	CENTER CONTACT	<1.5 mΩ
	OUTER CONTACT	<1.0 mΩ
INSULATION RESISTANCE		>5000 MΩ
INSERTION LOSS		< 0.1X $\sqrt{F(GHz)}$
RF-LEAKAGE		N/A
VSWR		<1.30@0-6GHz
3RD INTERMODULATION		N/A

MECHANICAL CHARACTERISTICS

FORCE TO ENGAGE AND DISENGAGE	N/A
CENTER CONTACT RETENTION FORCE	>6 lbs
CABLE RETENTION FORCE	>20 lbs
CENTER CONTACT TORQUE FORCE	>2 lbs
DURABILITY	>500 cycles

ENVIRONMENTAL PARAMETER

TEMPERATURE RANGE	-55 ℃~+125 ℃
THERMAL SHOCK	US MIL- STD 202, METH. 107, COND. B
VIBRATION	US MIL- STD 202, METH. 204, COND. B
SHOCK	US MIL- STD 202, METH. 213, COND. I
CLIMATIC CLASS	IEC 60068 65/165/21

* CUSTOMER OUTLINE DRAWING

UNLESS OTHERWISE SPECIFIED:
1) EDGES : C0.15 MAX ;
2) REMOVE ALL BURRS ;
3) SURFACE ROUGHNESS : Ra1.6 ;
4) UNITS : mm ;
5) DIMENSIONS TOLERANCES
DECIMALS : .x ±0.3 .xx ±0.2 .xxx±0.1;
ANGLES : ± 5°.

THIRD ANGLE PROJECTION

APPROVED :	CUSTOMER P/N : -
CHECKED :	SCALE : 1 : 1
DRAWING : HYH	DATE : 2020-09-03
	PAGE : 1/1

SLK SUPERLINK

TITLE : N FEMALE S/T CRIMP FOR LMR-100A CABLE ,50Ω

DRAWING NO. : 5NCF11S-A409-001

COMPANY WEBSITE : www.slkcorp.com