REV	DESCRIPTION	ECN NO	NAME	DATE
0	FIRST EDITION	N/A	XIAO	2016-03-17
1	NEW FRAME	N/A	Liu	2020-07-10

RoHS

ALL PARTS MUST MEET TO RoHS REQUIREMENTS

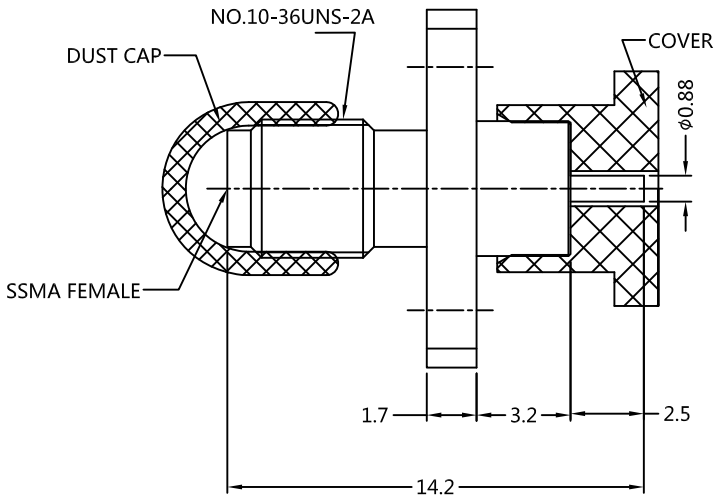

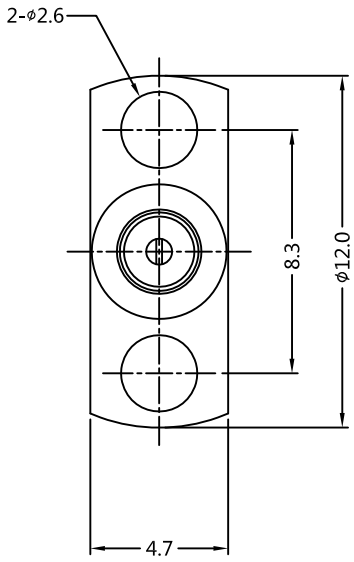

MATERIALS AND PLATING		UNIT: MICRO-INCHES
BODY	BRASS C3604	GOLD 10 u"/NICKEL/COPPER
CONTACT PIN	Be-Cu C17300	GOLD 50 u"/NICKEL/COPPER
INSULATOR	PTFE ASTM-D-1710	N/A

ELECTRICAL CHARACTERISTICS		
IMPEDANCE		50 Ω
VOLTAGE RATING		250 V(rms)
FREQUENCY RANGE		DC~12 GHz
DIELECTRIC WITHSTANDING VOLTAGE		>750 V
CONTACT RESISTANCE	CENTER CONTACT	<4.0 mΩ
	OUTER CONTACT	<2.0 mΩ
INSULATION RESISTANCE		>1000 MΩ
INSERTION LOSS		<0.5√F dB
VSWR		<1.2
3RD INTERMODULATION		N/A

MECHANICAL CHARACTERISTICS	
FORCE TO ENGAGE AND DISENGAGE	N/A
CENTER CONTACT RETENTION FORCE	>4 lbs
RECOMMENDED COUPLING TORQUE	N/A
COUPLING NUT RETENTION FORCE	N/A
DURABILITY	>500 cycles

ENVIRONMENTAL CHARACTERISTICS	
TEMPERATURE RANGE	-60 ℃~+165 ℃
THERMAL SHOCK	MIL- STD 202, Meth. 107,Cond. B
VIBRATION	MIL- STD 202, Meth. 204,Cond. D
SHOCK	MIL- STD 202, Meth. 213,Cond. I

* CUSTOMER OUTLINE DRAWING

UNLESS OTHERWISE SPECIFIED:
1) C0.15 MAX;
2) REMOVE ALL BURRS;
3) SURFACE ROUGHNESS : Ra1.6;
4) UNITS:mm;
5) DIMENSIONS TOLERANCES
DECIMALS .x ±0.3 .xx ±0.2 .xxx±0.1
ANGLES ±5°

THIRD ANGLE PROJECTION

APPROVED:	CUSTOMER P/N: -
CHECKED:	SCALE: 4:1
DRAWING:	DATE: 2020-07-10

SLK SUPERLINK

TITLE: SSMA FEMALE S/T FOR 2-HOLE FLANGE ,50Ω

DRAWING NO: 5SAF25S-P01

COMPANY WEBSITE: www.slkcorp.com