REV.	DESCRIPTION	ECN NO.	NAME	DATE
0	FIRST EDITION	N/A	XU	2016-06-29
0-1	Update the drawing	N/A	XU	2016-07-05
0-2	Update the drawing	N/A	XU	2016-07-13
0-3	Modify the Frequency range	N/A	XU	2016-07-13
4	REPLACE FRAME	N/A	Kevin.Li	2020-07-04

RoHS

ALL PARTS MUST MEET TO RoHS REQUIREMENTS

REMARKS:
1.CRIMPED FERRULE HEX. CRMIP SIZE .213"
2.CRIMPED CONTACT PIN HEX. CRMIP SIZE .068"

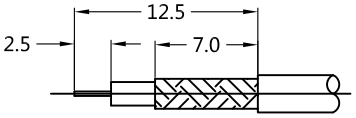

RECOMMENDED
CABLE STRIPPING DIM'S

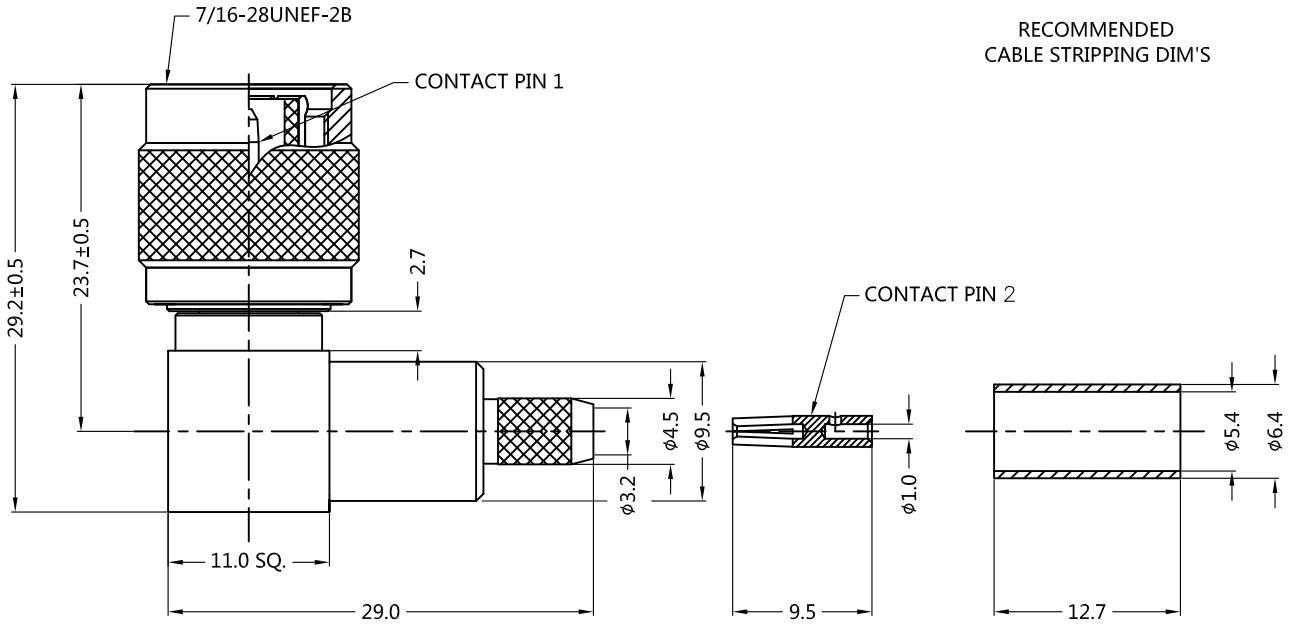

MATERIALS AND PLATING UNIT: MICRO-INCHES

PART NAME	MATERIALS	PLATING
BODY	BRASS	NICKEL 100 u" / COPPER
CONTACT PIN 1	BRASS	GOLD 5 u"/NICKEL/COPPER
CONTACT PIN 2	Be-Cu	GOLD 5 u"/NICKEL/COPPER
INSULATOR	PTFE ASTM-D-1710	NATURAL
FERRULE	COPPER	NICKEL 200 u" / COPPER

ELECTRICAL CHARACTERISTICS

IMPEDANCE		50 Ω
VOLTAGE RATING		500V(rms)
FREQUENCY RANGE		0 ~ 11GHz
DIELECTRIC WITHSTANDING VOLTAGE		> 1500V
CONTACT RESISTANCE	CENTER CONTACT	< 1.5mΩ
	OUTER CONTACT	< 0.2m Ω
INSULATION RESISTANCE		> 5000MΩ
INSERTION LOSS		$<0.1\sqrt{F(GHz)}$ dB
VSWR		<1.35@4GHz
3RD INTERMODULATION		N/A

MECHANICAL CHARACTERISTICS

FORCE TO ENGAGE AND DISENGAGE	N/A
CENTER CONTACT RETENTION FORCE	> 6 lbs
RECOMMENDED COUPLING TORQUE	8-12 in-lbs
COUPLING NUT RETENTION FORCE	> 100 lbs
DURABILITY	> 500cycles

ENVIRONMENTAL PARAMETER

TEMPERATURE RANGE	-55 ℃~+155 ℃
THERMAL SHOCK	US MIL- STD 202, Meth. 107, Cond. B
VIBRATION	US MIL- STD 202, Meth. 204, Cond. B
SHOCK	US MIL- STD 202, Meth. 213, Cond. I

* CUSTOMER OUTLINE DRAWING

UNLESS OTHERWISE SPECIFIED:
1) EDGES : C0.15 MAX ;
2) REMOVE ALL BURRS ;
3) SURFACE ROUGHNESS : Ra1.6 ;
4) UNITS : mm ;
5) DIMENSIONS TOLERANCES
DECIMALS : .x ±0.3 .xx ±0.2 .xxx±0.1;
ANGLES : ± 5°.

THIRD ANGLE PROJECTION

APPROVED :	CUSTOMER P/N : -
CHECKED :	SCALE : -
DRAWING :	DATE : 2020-07-04
	PAGE : 1/1

SUPERLINK

TITLE : TNC MALE R/A CRIMP FOR RG58 CABLE,50Ω

DRAWING NO. : 5TCM11R-A41-004

COMPANY WEBSITE : www.slkcorp.com